HOT FILM ANEMOMETRY

ANEMOMETRY balances heat gains with flow induced heat losses. Anemometers are constructed so that the dominant thermal loss for one or more heated RTDs is convective heat transfer to material flowing past the sensor.

Thermal Energy Gain = Σ Thermal Energy Losses

$$= \left[\begin{array}{c}\text{Radiative}\\ \text{Loss}\end{array}\right] + \left[\begin{array}{c}\text{Conductive}\\ \text{Loss}\end{array}\right] + \left[\begin{array}{c}\text{Convective}\\ \text{Loss}\end{array}\right]$$

$$+ \left[\begin{array}{c}\text{Conductive}\\ \text{Loss to Flow}\end{array}\right] \approx \left[\begin{array}{c}\text{Conductive}\\ \text{Loss to Flow}\end{array}\right]$$

Capillary-Tube flow designs examine the differences in two self heated RTDs held at either equal temperature or equal electronic power input. Flowing material causes either a smaller thermal loss or a higher temperature at the down stream heater.

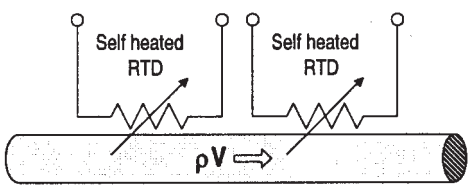

Immersion flow designs commonly use a self heated RTD and temperature compensation RTD with $T_{heated} = T_{amb} + \Delta T$, ΔT = constant. The velocity of the flowing material is then related to the heating energy, I^2R, required to keep ΔT = constant.

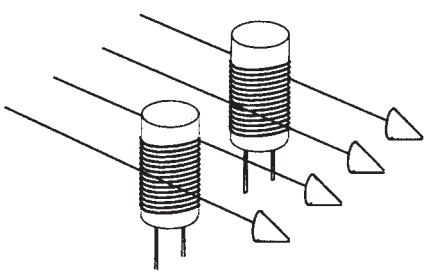

A common self heating immersion circuit uses two RTDs with very different ice point values in a bridge configuration. Current self heats the smaller RTD, $T = T_{amb} + \Delta T$, until its simultaneous increase in resistance, $R = R(T_{amb} + A\,\Delta T$, balances the bridge.

The large RTD provides temperature compensation. As T_{amb} increases, the large RTD's resistance increase causes further heating of the small RTD so that ΔT is held constant. The large difference in RTD ice point values insures that the large RTD does not self heat since most of the power is directed into the smaller RTD.

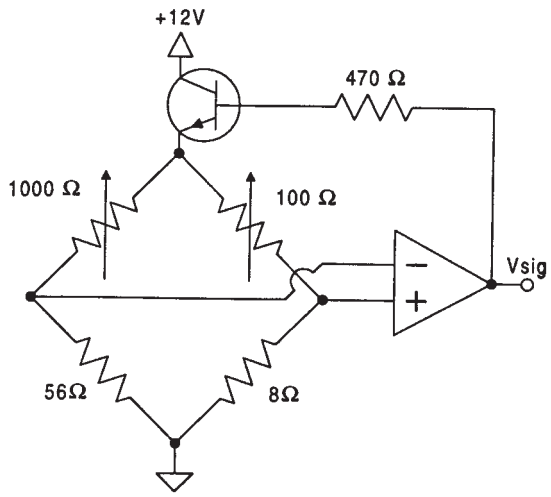

Temperature compensation allows calibration of flow velocity against V_{sig} (generally nonlinear) independent of the flow temperature, T_{amb}. If the temperature compensation is not good enough, i.e. $\Delta T = f(T_{amb})$, calibrate versus velocity and flow temperature. For optimal temperature compensation, matched sensitivities (over the T_{amb} range) are required, specifically:

$$\left.\frac{\partial R_{self\ heated}}{\partial T}\right|_{(T_{amb} + \Delta T)} = \left.\frac{\partial R_{temp\ comp}}{\partial T}\right|_{T_{amb}} \quad \text{For all } T_{amb}$$
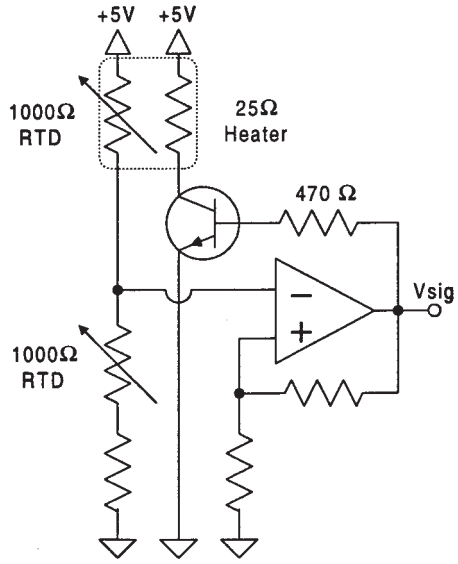
If high heating power is required (such as in a liquid) use two RTDs and a separate heater. A separate heater also improves temperature compensation since identical RTDs with matched alphas can be used. However, the best ambient temperature compensation requires that the sensitivities rather than alpha values be matched.